VIKING PRO XL

Exploded Diagram

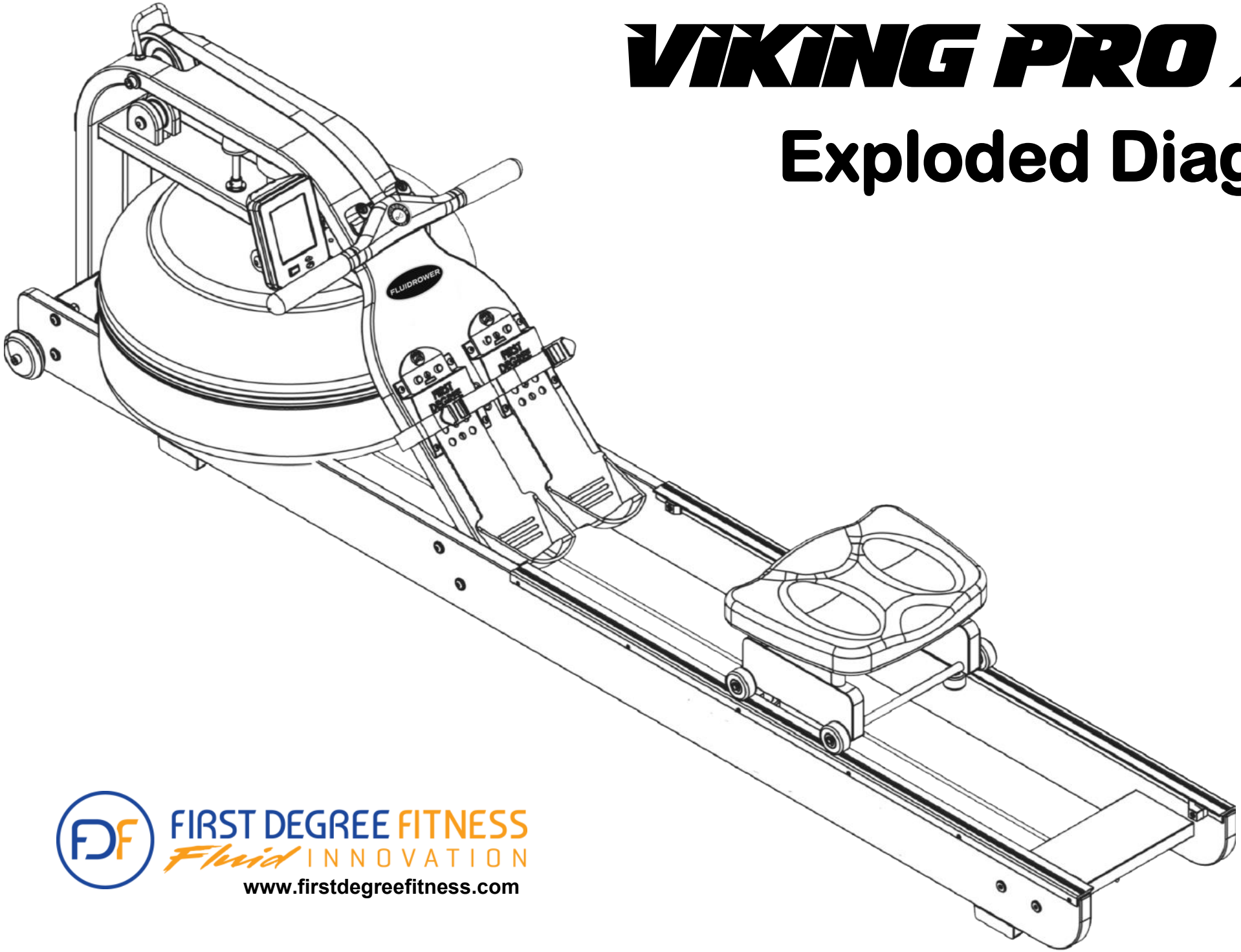

FIRST DEGREE FITNESS
Fluid INNOVATION
www.firstdegreefitness.com

2020/11/27

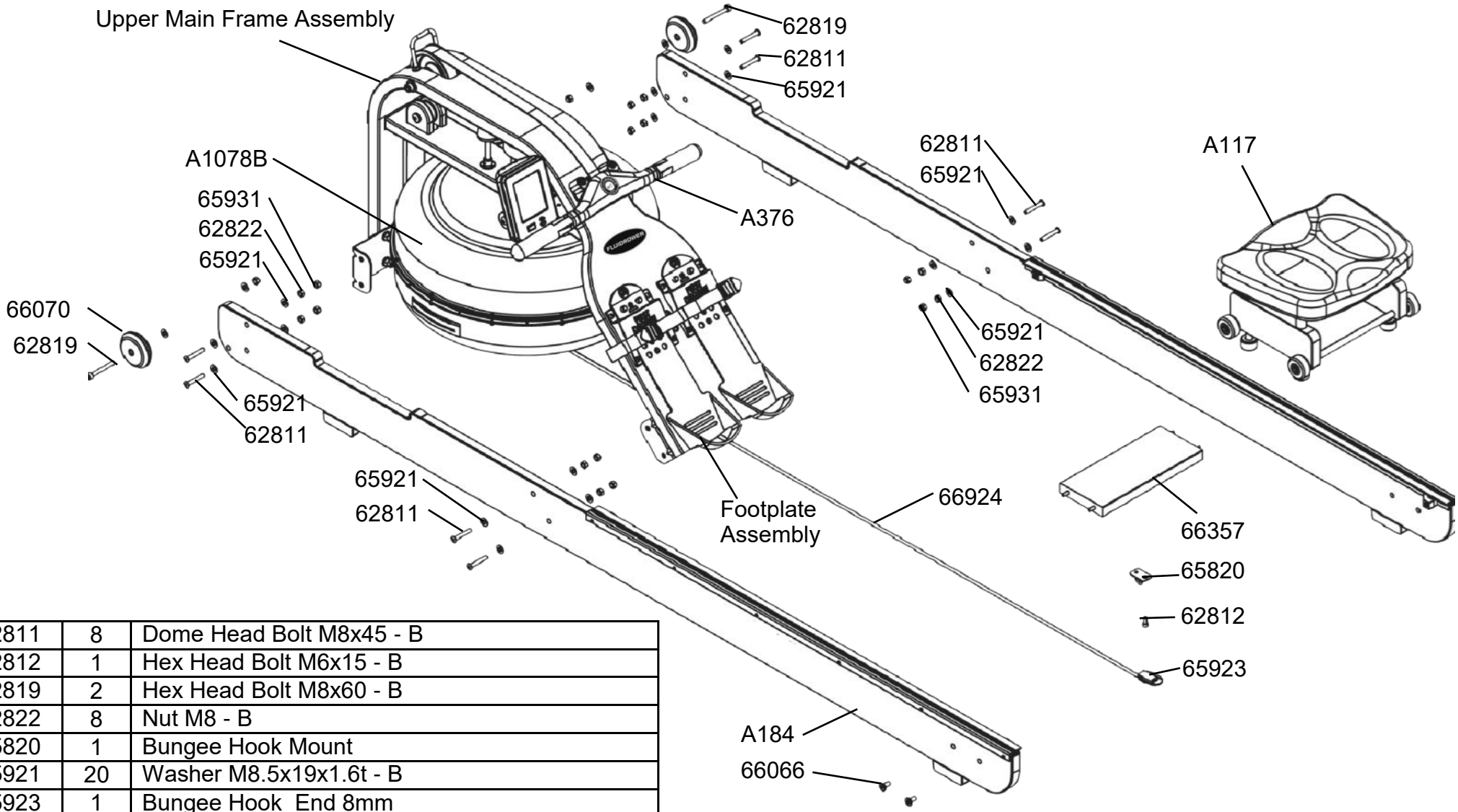

62811	8	Dome Head Bolt M8x45 - B
62812	1	Hex Head Bolt M6x15 - B
62819	2	Hex Head Bolt M8x60 - B
62822	8	Nut M8 - B
65820	1	Bungee Hook Mount
65921	20	Washer M8.5x19x1.6t - B
65923	1	Bungee Hook End 8mm
65931	10	Nyloc Nut M8 - B
66066	4	Shoulder Screw M6x15 - B
66070	2	Transport Wheel
66357	1	Rear Board 268x115x23
66924	1	Bungee Rope 8mm x 2230 & Inner Clip #65922
A117	1	Seat Assembly Complete
A184	1	Side Rail Assembly L/R
A376	1	Plastic Handle Complete
A1078B	1	10 Level Tank Complete Assembly

Upper Main Frame Assembly

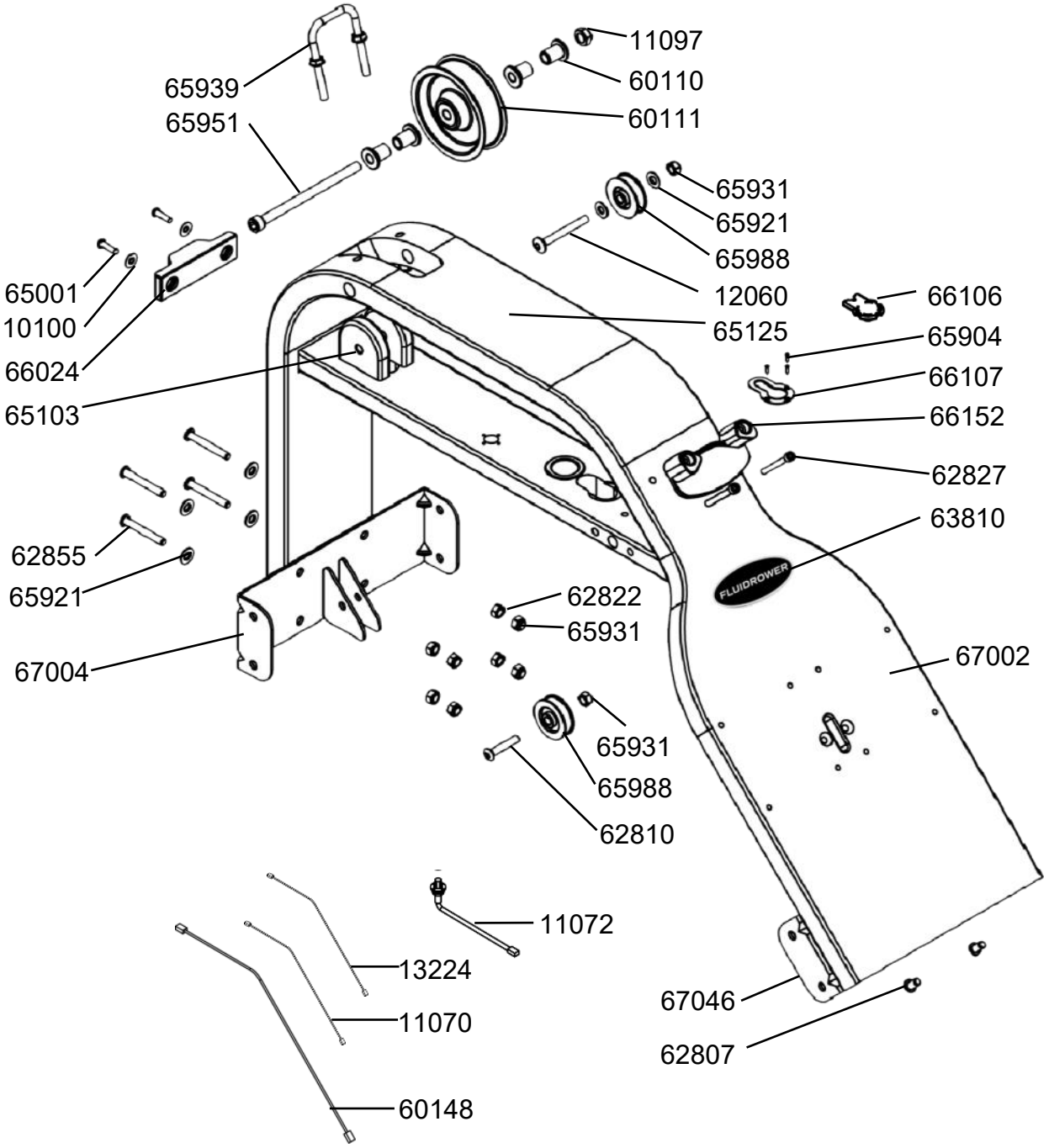

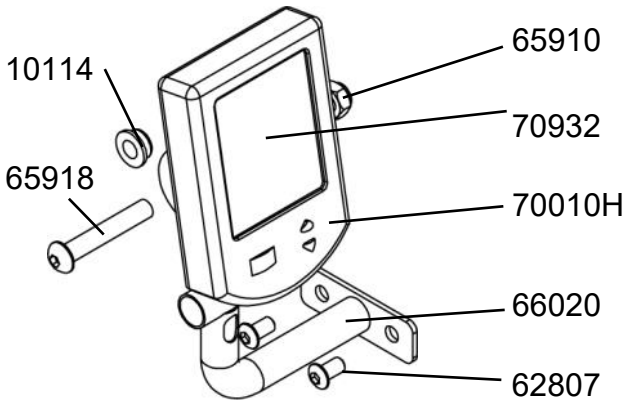

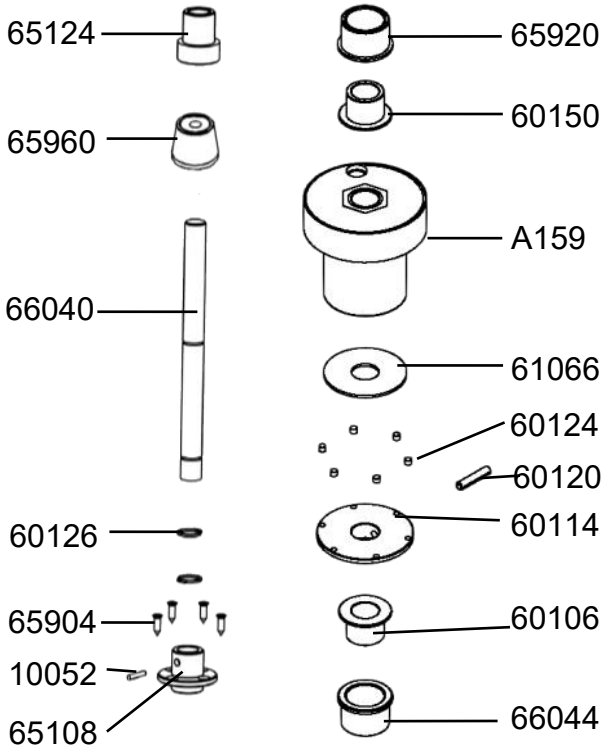

P/N	Qty	Description	P/N	Qty	Description
10052	1	Grub Screw M4x6 - B	65124	1	Idle Wheel Shaft Insert Bracket (Upper)20x15x31
10100	2	Washer M6x16x1 - B	65125	1	Rubber End Cap - Main Frame
10114	2	Computer Mount Plastic Bushing	65904	7	Screw for Wood M3x10 - B
11070	1	Sensor Connecting Cable 300mm	65910	1	Nyloc Nut M10 - B
11072	1	Sensor 100mm	65918	1	Dome Head Bolt M10x60 - B
11097	1	Nut Dome Head M10 - B	65920	1	Shaft Spacer Upper 40x27.5x34.8
12060	1	Dome Head Bolt M8x60 - B	65921	12	Washer 8.5x19x1.6t - B
13224	1	Level Wiring 300mm	65931	8	Nyloc Nut M8 - B
60106	1	Main Soil Bushing - Lower 38x20x22	65939	1	U Bolt 8mm with 2xFlange Nuts #65940
60110	4	Belt Pulley Spacer 10x24x23	65951	1	Hex Head Bolt M10x140 - B
60111	1	Belt Pulley 100mm & 2x Bearing #60112	65960	1	Idle Wheel & Bearing 6000ZZ x 2 #60112
60114	1	Magnet Ring & 6 x Magnet #60124	65988	2	Bungee Pulley & Bearing & Spacer x2
60120	1	Roll Pin M6.3x30	66020	1	Computer Stalk
60126	2	C Clip 10mm	66024	1	Bump Stop Main Frame - 80x20x37.5
60148	1	Heart Rate Lead - 400mm	66040	1	Idle Wheel Shaft 10x122 - B
60150	1	Main Shaft Nylon Bushing - Upper	66044	1	Bushing 40x35x3x22
61066	1	Plastic Washer M5920.1x2T	66106	1	Sensor Bracket Cap
62807	4	Dome Head Bolt M8x15 - B	66107	1	Sensor Bracket
62810	1	Dome Head Bolt M8x35 - B	66152	1	Bar Catch
62822	4	Nut M8 - B	67002	1	Upper Main Frame with Decal # 63810
62827	2	Hex Head Bolt M6x50 - B	67004	1	Bungee Pulley Bracket Lower
62856	4	Dome Head Bolt M8x55 - B	67046	1	Support Bracket - Lower Main Frame
63987	4	Counter Sunk Bolt M4x40	70010H	1	Bluetooth Auto-Adjust Monitor - L10
65001	2	Dome Head Bolt M6x25 - B	70932	1	LCD for Bluetooth Auto-Adjust Monitor for AOMEI
65103	2	Bungee Wheel Bracket 15x55.4x60	A159	1	Belt/ Bungee Pulley Complete with Bungee Assembly
65108	1	Idle Wheel Shaft Bracket (Lower)			

A1078B - 10 Level Tank Complete Assembly

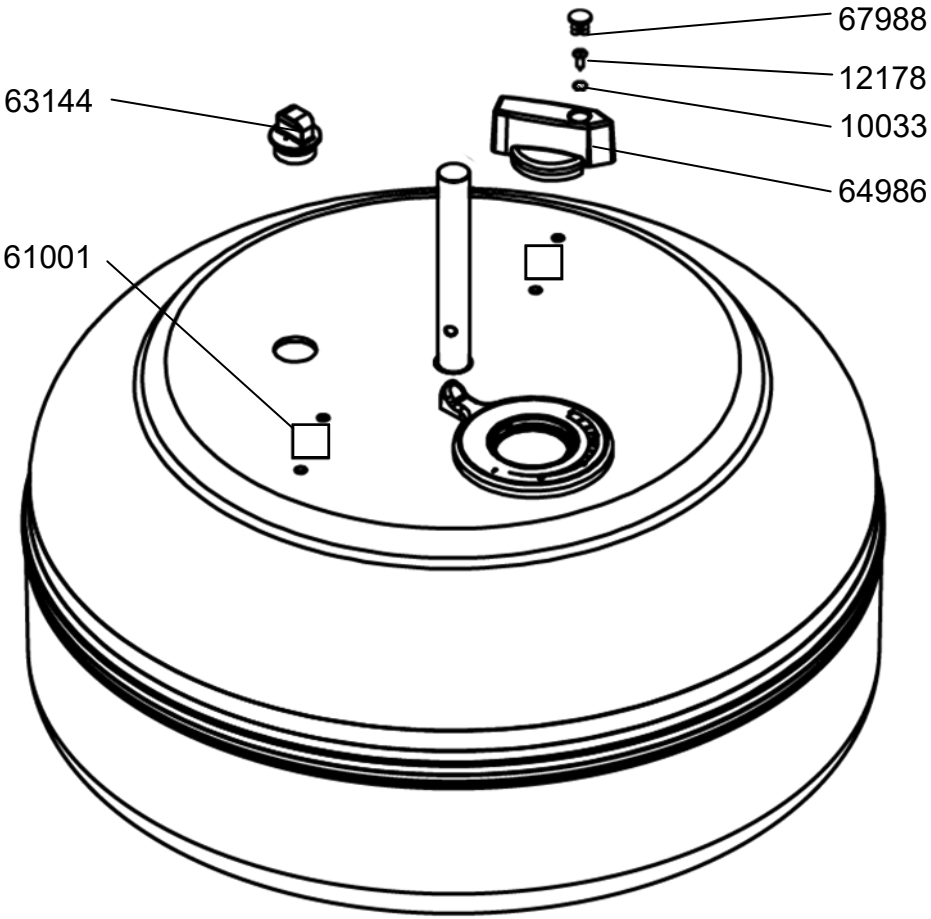

10033	1	Washer M4 SUS
12178	1	Dome Head Bolt M3x10 SUS
61001	2	Tank Bonding Strip 3M-VHB 40x40x1mm
63144	1	Tank Plug for HS Tank
64986	1	Adjuster Knob for Plus / V / XL - Black
67988	1	Knob Cap

A376 Plastic Handle Complete

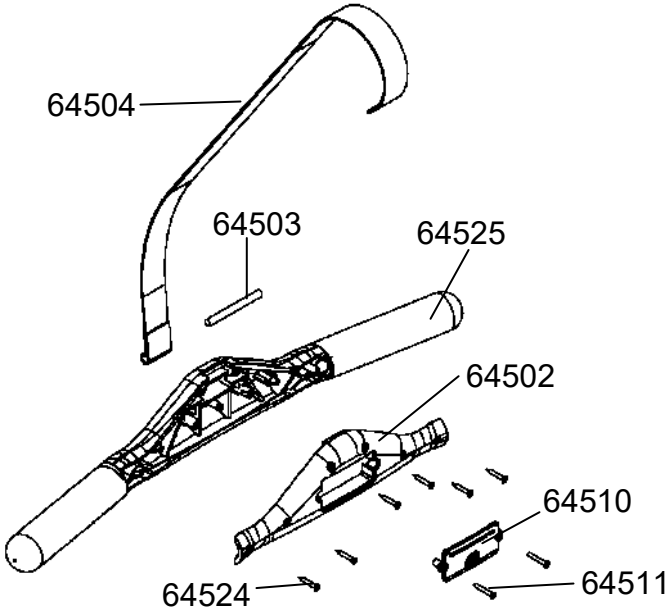

64502	1	Handle Plastic Cap
64503	1	Belt Bush
64504	1	Belt
64510	1	Battery Cap
64511	2	Round Sunk Screw SUS M3x12-B
64524	6	Counter Sunk Screw SUS M3x25-B
64525	1	Handle with Decal #64523 & 2*64507 & 2*64516&4*64512

Footplate Slider Assembly

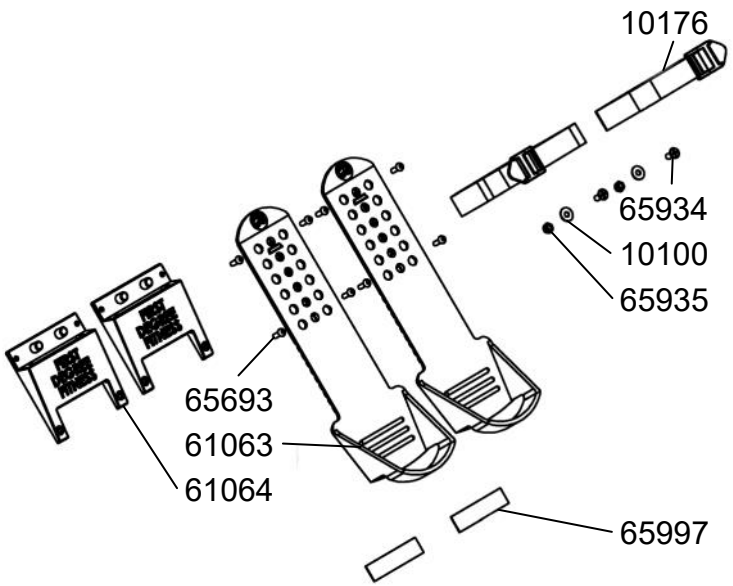

10100	2	Washer M6x16x1 - B
10176	2	Foot Strap & Buckle
61063	2	Footplate Slider with Velcro #65997
61064	2	Footplate Slider Base 120x111x22.8
65934	2	Counter Sunk Bolt M6x40 - B
65935	2	Nyloc Nut M6 - B
65693	8	Dome Head Bolt M5x15 - B

A159 Belt Bungee Pulley Complete

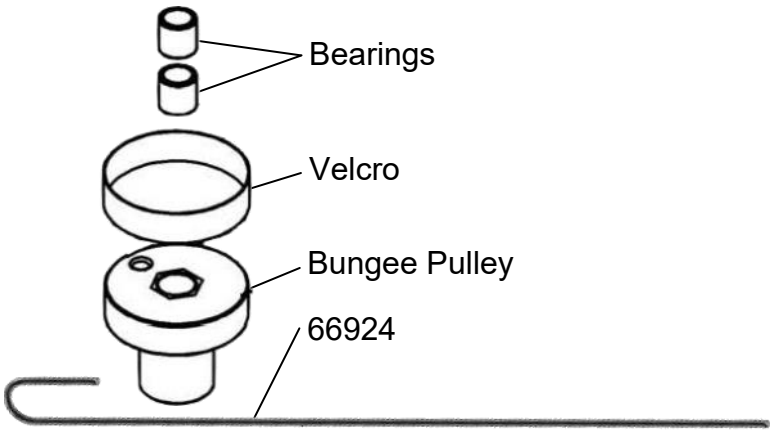

60900	1	Belt Bungee Pulley Complete & Velcro #60903& One Way Bearings #90136
66924	1	Bungee 8mm x 2230 & Inner Clip #65922

A117 Seat Assembly Complete

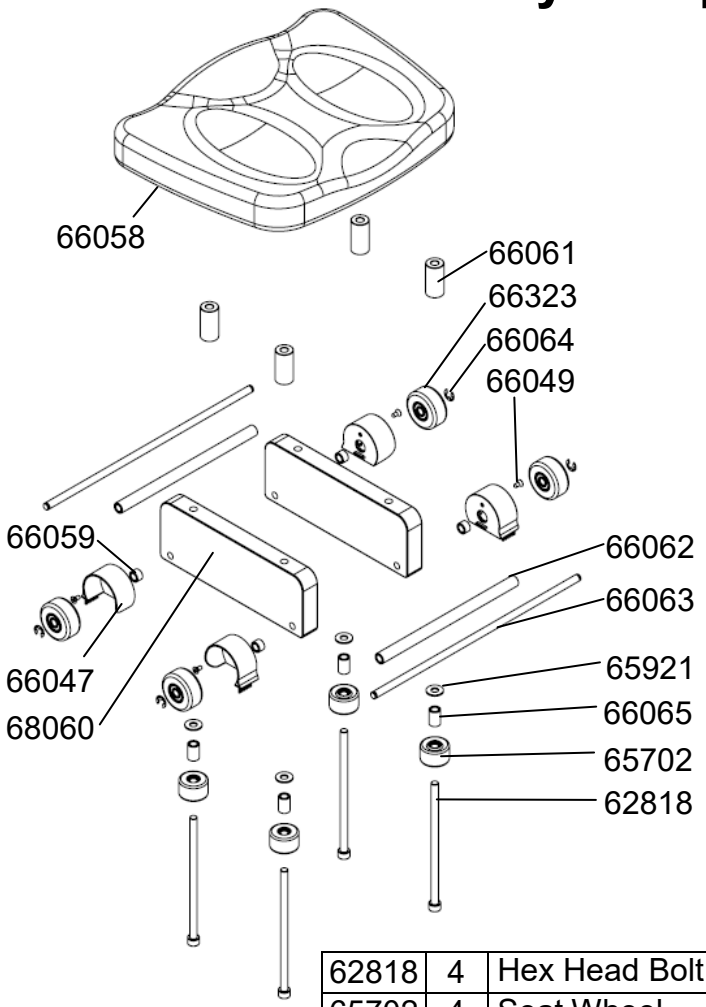

62818	4	Hex Head Bolt M8x160 - B
65702	4	Seat Wheel
65921	4	Washer 8.5x19x1.6t - B
66047	2	Brush Cover - Left & Right
66049	4	Counter Sunk Bolt 4x15 - B
66058	1	Seat LS-E28 - For Wooden Rail
66059	4	Spacer 12.7x8x8.5
66061	4	Spacer 20x8x38
66062	2	Spacer 12x8x209
66063	2	Axle Shaft 8mm
66064	4	D7 Eclip
66065	4	Spacer 12.7x8x19.5
66323	4	Seat Wheel 98A
68060	2	Seat Frame 220x78.5x23

A184 Side Rail Assembly L/R

Right

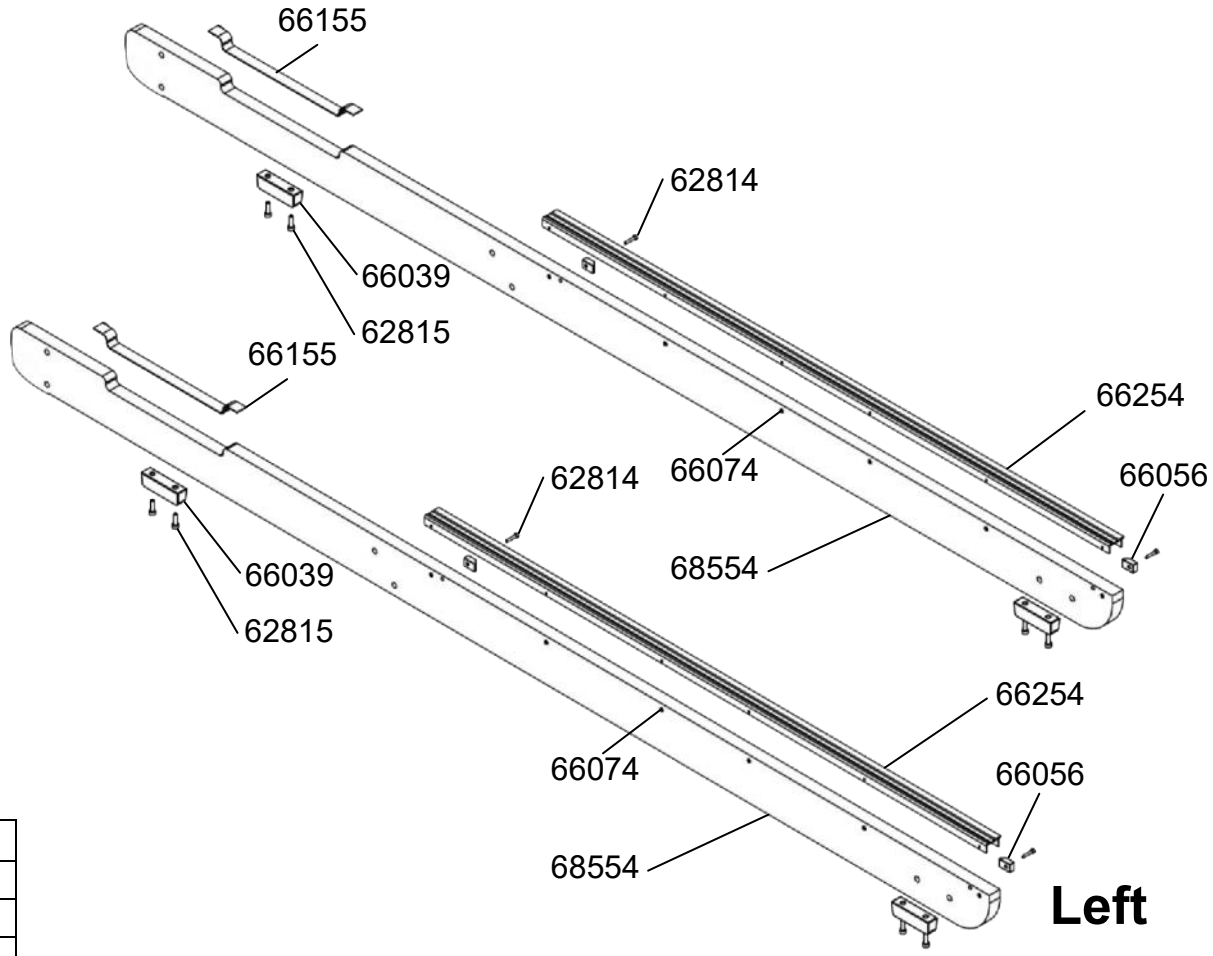

62814	4	Hex Head Bolt M4x20 - B
62815	8	Hex Head Bolt M6x20 - B
66039	4	Side Rail Bumper
66056	4	Bump Stop - Square 23x15x6.5
66155	2	Velcro for Side Rail 20x480mm
66254	1	Seat Runner L/R with Dome Head Screw #66074
68554	2	Side Rail with Decal #69316

HHDVX - Hardware Kit

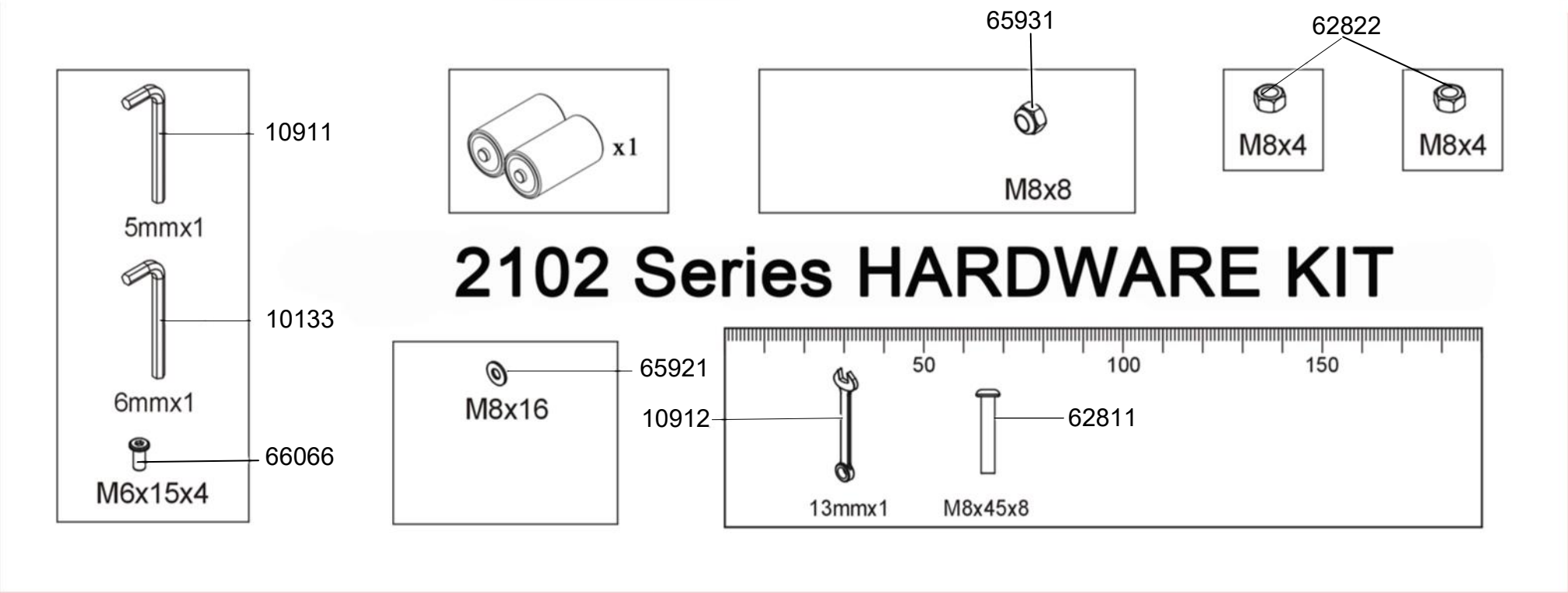

10133	1	Allen Key 6mm
10208	1	D Battery
10911	1	Allen Key 5mm
10912	1	Wrench 13mm
62811	8	Dome Head Bolt M8x45 - B
62822	8	Nut M8
65921	16	Washer M8 - B
65931	8	Nyloc Nut M8 -B
66066	4	Shoulder Screw M6x15 - B